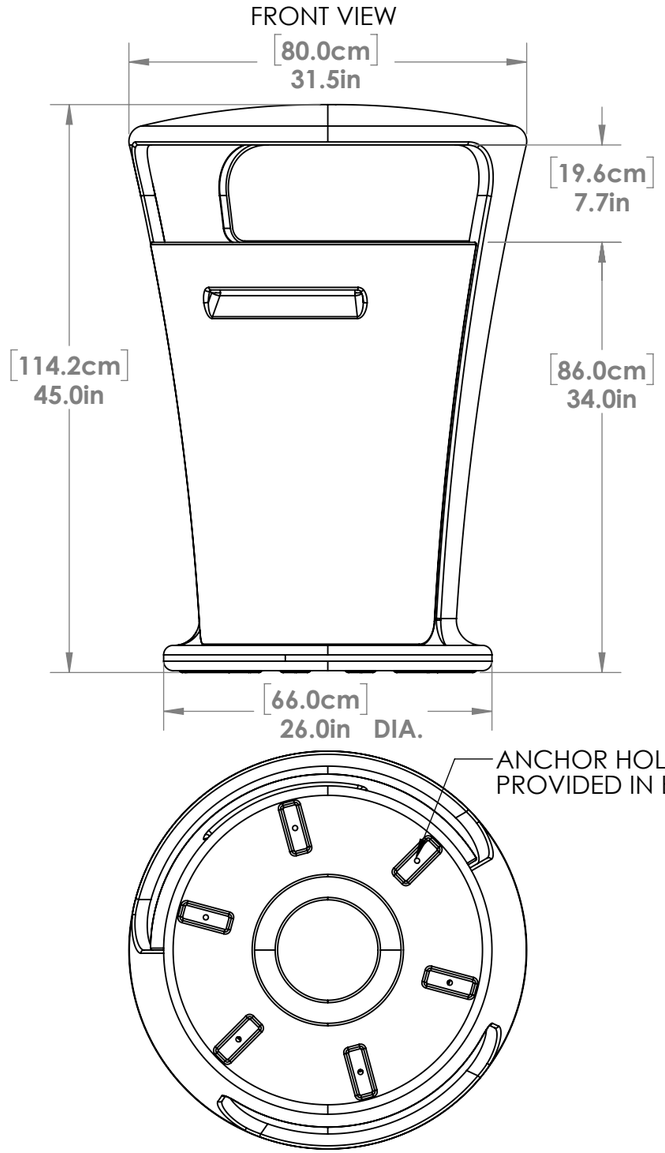

BOTTOM VIEW

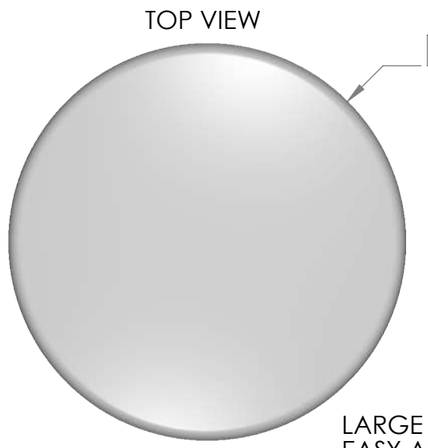

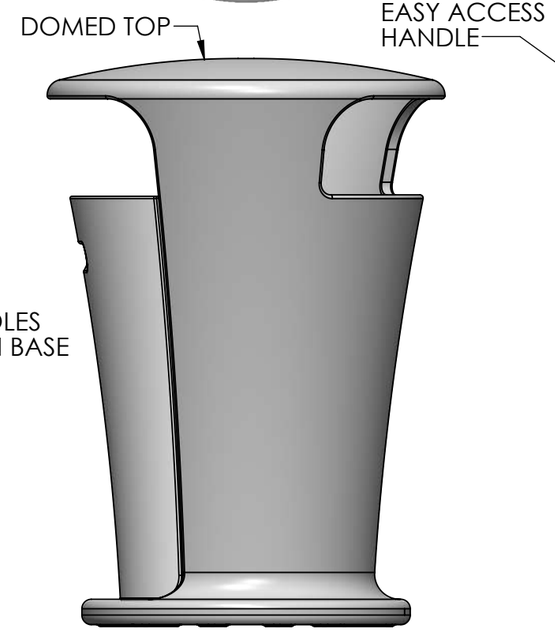

SIDE VIEW



LOCK MAY VARY
(FOR ILLUSTRATION ONLY)



EXPANDED VIEW



GRAY COLOR FOR ILLUSTRATION ONLY

INTEGRITY EAGLE ROUND CITY CAN

FEATURES:

1. **INTEGRATED BODY AND RAIN BONNET-FRAME ENCLOSURE KEEPS ELEMENTS OUT AND CONTENTS DRY.**
2. **"NON-LIFT" SLIDE-OUT CAN ALLOWS EASY ACCESS TO GALVANIZED SPRING STEEL TRASH BAG HOLDERS.**
3. **PUSH-BUTTON KEYED CAM LOCK SECURES THE REMOVABLE CAN TO THE FRAME ENCLOSURE.**
4. **INTEGRAL BASE IS RAISED FOR DRAINAGE & HAS BUILT-IN HIDDEN ANCHOR HOLES.**
5. **SMOOTH CORNERS, EDGES AND LIGHTLY TEXTURED SURFACES FOR EASY CLEANING.**
6. **MADE IN AMERICA OF DURABLE POLYETHYLENE WEATHERPROOF CONSTRUCTION.**
8. **MULTIPLE COLOR CHOICES AND OPTIONAL CUSTOM COLORS CAN BE MADE AVAILABLE.**

INTEGRITY
JANITORIAL PRODUCTS

PRODUCT:	EAGLE ROUND CITY TRASH RECEPTACLE
MODEL:	4550I
MATERIAL:	LLDPE
SIZE:	50 Gallons (189 Liters)
DATE:	11/5/2026
CONTACT:	IntegrityCommercialProducts.com