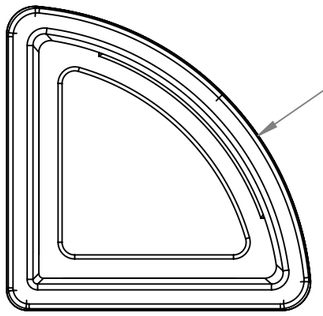

TOP VIEW

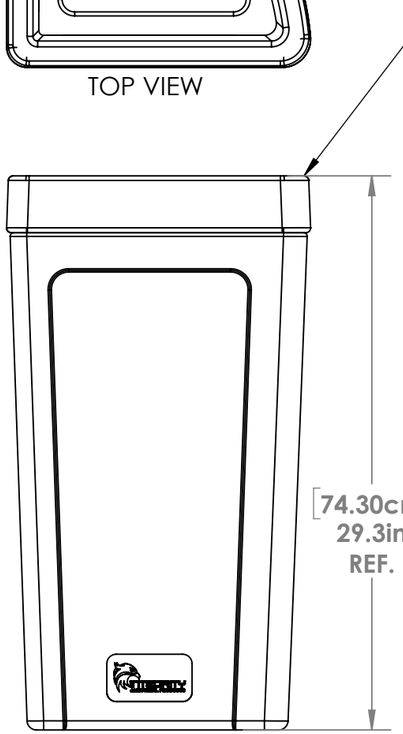

BACK/SIDE VIEW

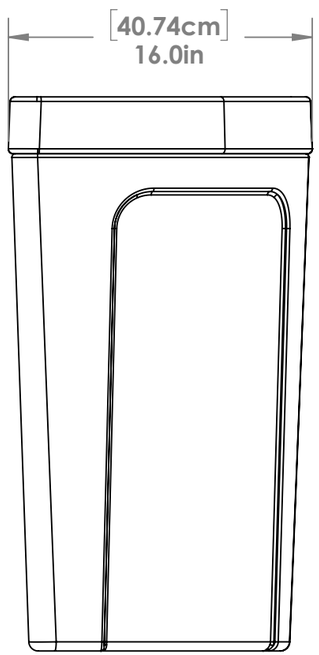

FRONT/SIDE VIEW

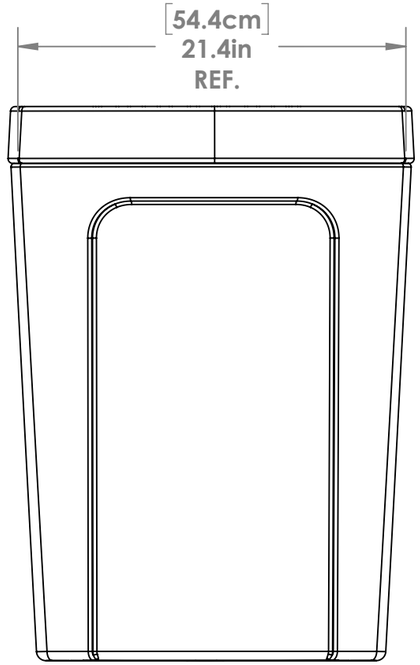

FULL FRONT VIEW

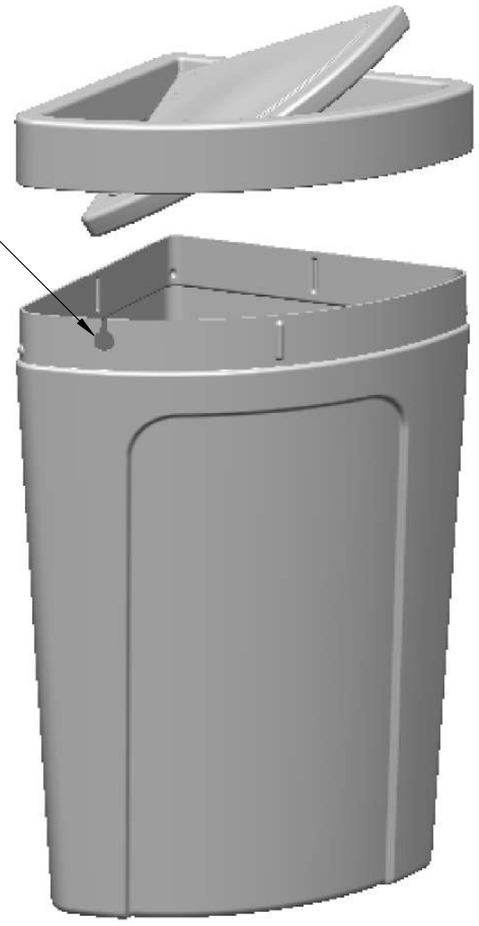

EXPANDED VIEW



GREY COLOR SHOWN
FOR DISPLAY ONLY

FEATURES:

1. **COMPACT CORNER DESIGN FITS IN TIGHT SPACES ALONG BALCONIES AND NARROW CORRIDORS.**
2. **MID-SHOULDER DESIGN ALLOWS TOP TO BE SECURED WHILE HIDING UNSIGHTLY "BAG SKIRTS".**
3. **REMOVABLE RIM WITH INTEGRAL SPRING-LOADED SWIVEL LID ALLOWS EASY ACCESS WITH NO CLUMSY STRAPS.**
4. **INTEGRAL "KEYHOLE" BAG LATCH SNAGS BAG LINERS AND HELPS KEEP THEM IN PLACE.**
5. **SMOOTH CORNERS, EDGES AND LIGHTLY TEXTURED SURFACES FOR EASY CLEANING.**
6. **21 GALLON (79 LITER) CAPACITY FIRE RESISTANT DESIGN.**
7. **MADE IN AMERICA OF DURABLE POLYETHYLENE WEATHERPROOF CONSTRUCTION.**
8. **MULTIPLE COLOR CHOICES AND OPTIONAL CUSTOM COLORS CAN BE MADE AVAILABLE.**

INTEGRITY
JANITORIAL PRODUCTS

PRODUCT:	**CORNER SWIVEL LID TRASH CAN**
MODEL:	8323I
MATERIAL:	LLDPE
SIZE:	21 Gallons (79 Liters)
DATE:	11/5/2026
CONTACT:	**IntegrityCommercialProducts.com**